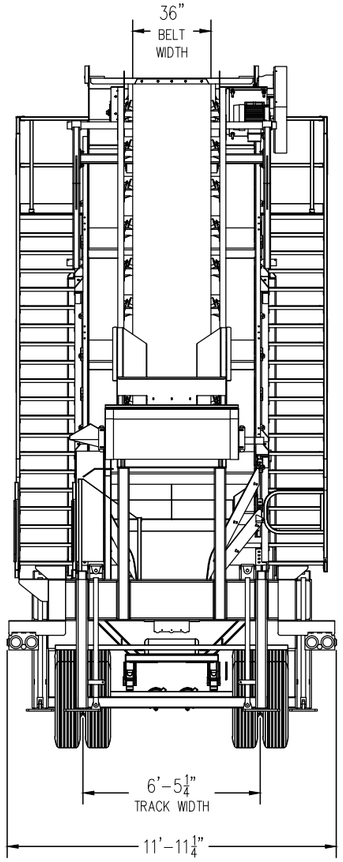

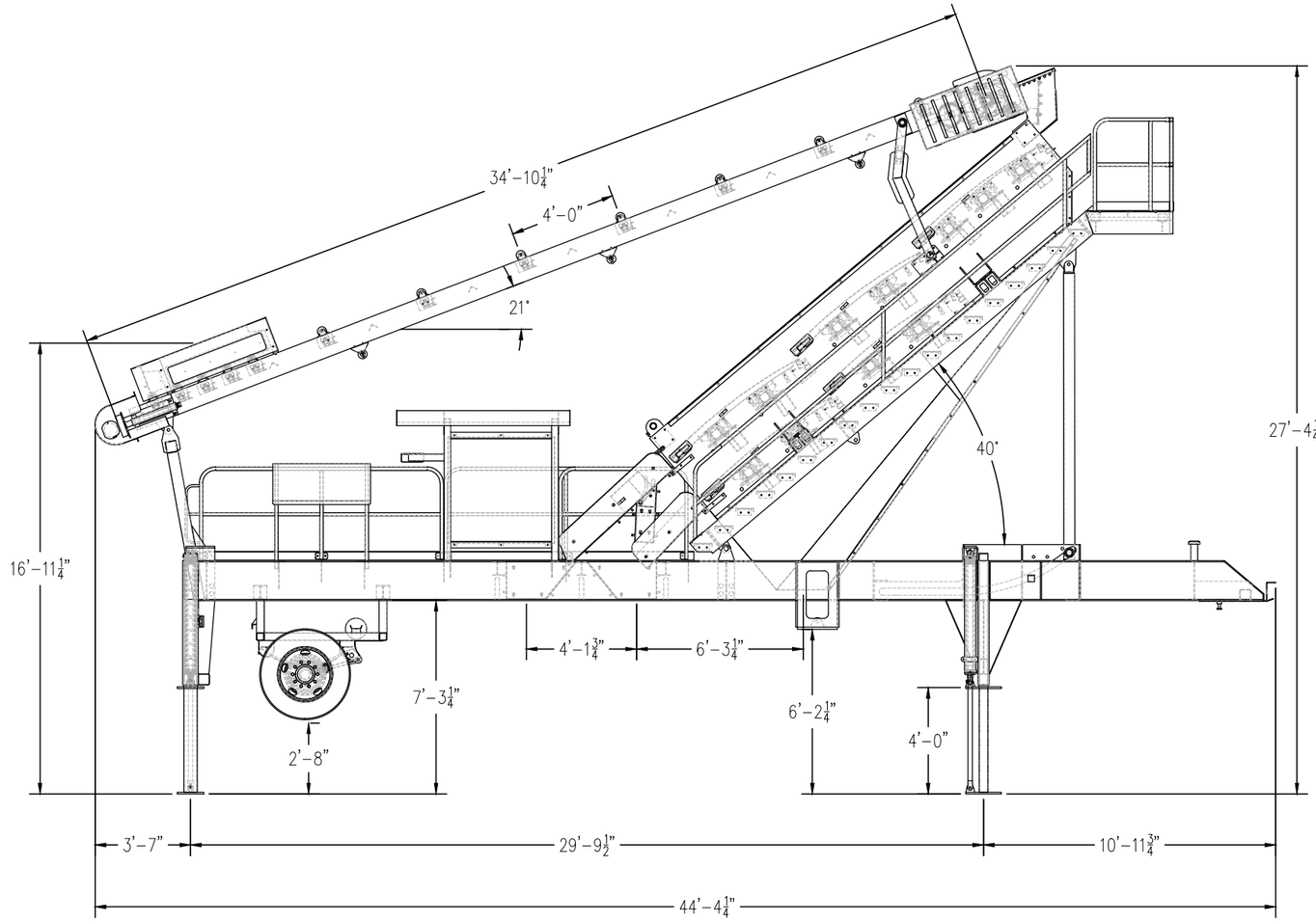

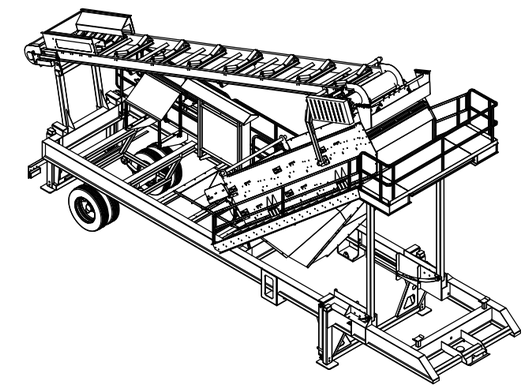

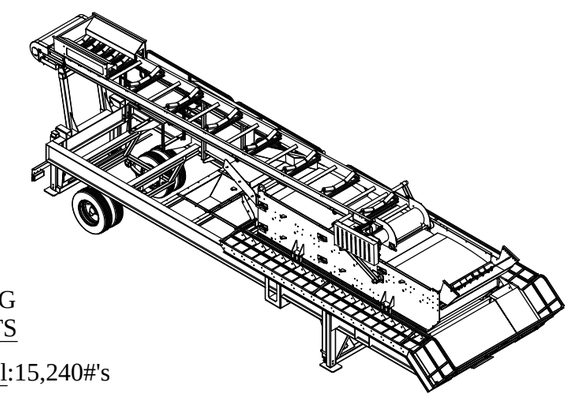

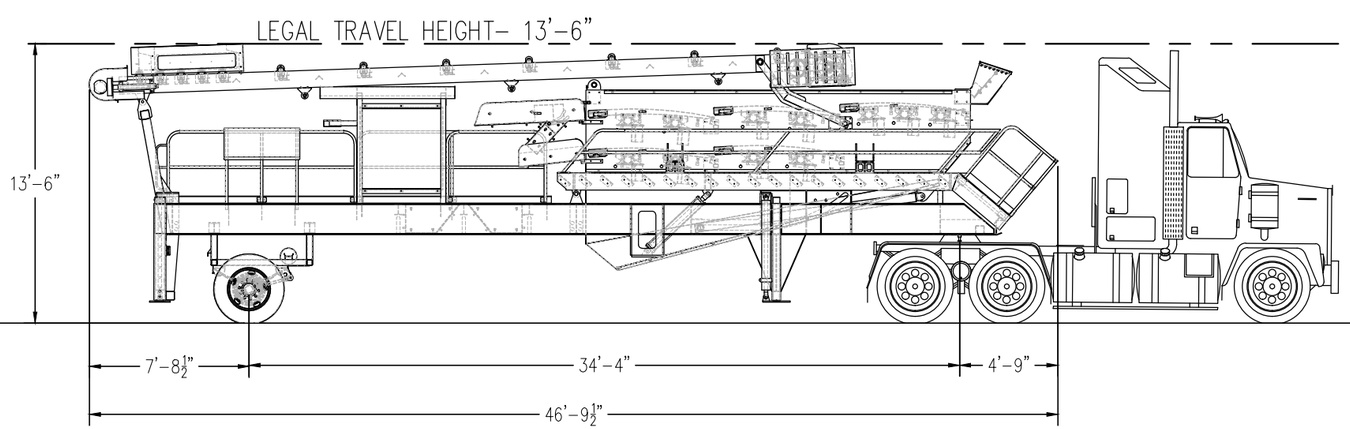

SHIPPING DIMENSIONS	SHIPPING WEIGHTS
Length: 46'- 9½"	5th Wheel:15,240#'s
Width: 11'- 11¼"	Axle: 15,200#'s
Height: 13'- 6"	Total: 30,440#'s

ALL DIMENSIONS IN INCHES UNLESS OTHERWISE STATED

REVISIONS		
NO.	DATE	BY
1		
2		
3		
4		
5		
6		
7		

TCI Manufacturing & Equipment Sales

TCI MANUFACTURING AND EQUIPMENT SALES, INC.
P.O. BOX 306 WALNUT, IL 61376
PHONE: (815) 379-2090
E-MAIL: ENGINEERING@TCIMFG.COM
FAX: (815) 379-2690

SCALE: 3/16"=1'-0"
DATE: 1/14/15
DRAWN BY: BOB
TITLE: 6X18DD PTSC GENERAL ARRANGEMENT
CHK'D BY:
SHEET 1 OF 1
DWG #: PTSC-GA
SIZE B